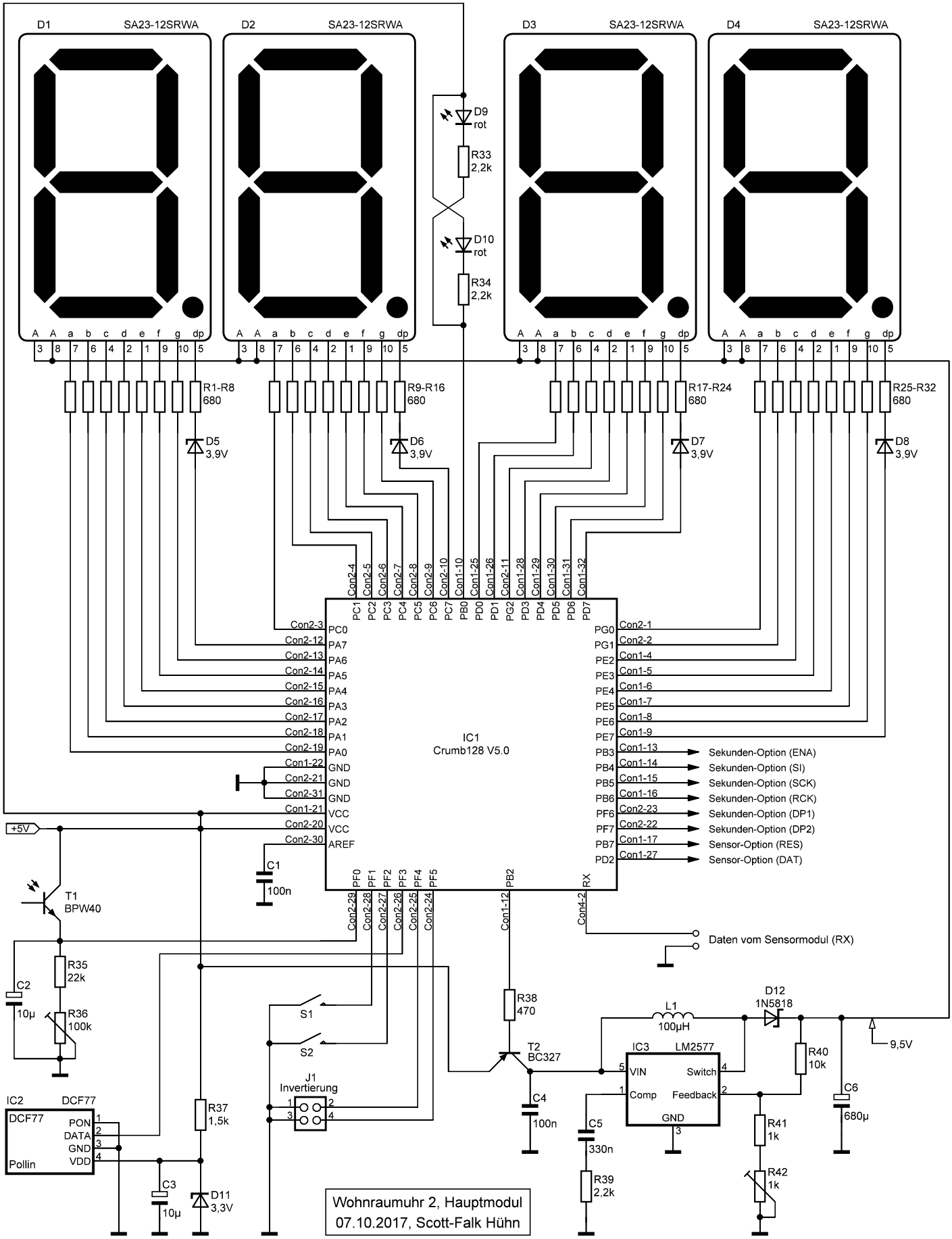
D1 SA23-12SRWA
D2 SA23-12SRWA
D3 SA23-12SRWA
D4 SA23-12SRWA
D9 rot
R33 2,2k
D10 rot
R34 2,2k
R1-R8 680
R9-R16 680
R17-R24 680
R25-R32 680
D5 3,9V
D6 3,9V
D7 3,9V
D8 3,9V
IC1
Crumb128 V5.0
Sekunden-Option (ENA)
Sekunden-Option (SI)
Sekunden-Option (SCK)
Sekunden-Option (RCK)
Sekunden-Option (DP1)
Sekunden-Option (DP2)
Sensor-Option (RES)
Sensor-Option (DAT)
Daten vom Sensormodul (RX)
+5V
C1 100n
T1 BPW40
R35 22k
C2 10µ
R36 100k
S1
S2
J1 Invertierung
IC2 DCF77
DCF77
PON
DATA
GND
VDD
Pollin
R37 1,5k
C3 10µ
D11 3,3V
R38 470
T2 BC327
C4 100n
L1 100µH
D12 1N5818
IC3 LM2577
VIN
Switch
Comp
Feedback
GND
C5 330n
R39 2,2k
R40 10k
R41 1k
R42 1k
C6 680µ
9,5V
Wohnraumuhr 2, Hauptmodul
07.10.2017, Scott-Falk Hühn